NOTES

X NUMBER REQUIRED

GLASS SPEC:
OUTER : 4mm HST TOUGHENED GLASS
CAVITY : 20mm ARGON FILLED + WARM EDGE SPACER + DC3363 UV RESISTANT SILICONE EDGE SEAL
INNER : 4mm HST TOUGHENED OR 6.8mm LAMINATED GLASS + POLISHED EDGES + LOW E COATING

- LIGHT TRANSMISSION = 78 %
- CENTRE PANE U VALUE = 1.1 W/m².K
- SOLAR G VALUE = 0.63
- ACOUSTIC REDUCTION = 31 (4/4) 36 (4/6.8) Rw dB
- AIR PERMEABILITY = CWCT CLASS A4
- WEATHER RESTIANCE = CWCT CLASS A7
- WIND RESISTANCE = CWCT CLASS E2400
- WEIGHT = SIZE DEPENDANT
- DOWSIL 3363 UV RESISTANT SILICONE EDGE SEALS TO IGU
- DOWSIL 791 UV RESISTANT EDGE SEALS TO FRAME
- AA FIRE-RATED: AA DESIGNATION (NATIONAL CLASS) OR bROOF (T4) EUROPEAN CLASS AND EURO CLASS A1 NON-COMBUSTIBLE
- LOADS = 750N/m² WIND & 640N/m² SNOW

ROOFLIGHT ORDER SIZE = OVERALL FINISHED AND WEATHER KERB DIMS
GLASS BONDED TO FRAME WITH GLAZING SECURITY TAPE ILLBRUCK TN136

KERB DETAILS SHOWN INDICATIVE, DETAILED DESIGN BY OTHERS TO MEET CURRENT BUILDING REGS. AN APPROVED DOCUMENT PART L COMPLIANT FULLY INSULATED TIMBER KERB IS AVAILABLE FROM ROOFGLAZE ROOFLIGHTS LTD.
MIN. 5° FALL RECOMMENDED TO HELP SHED WATER. LARGER UNITS MAY REQUIRE STEEPER PITCHES. FINAL DECISION BY OTHERS.

PRODUCT U-VALUE = AS LOW AS 0.8 W/m².K (u-values are size dependant)

ROOFLIGHT OPERATED VIA ESPAGNOLETTE LOCKS AND GAS RAM ASSIST.
SIZE RESTRICTIONS APPLY.

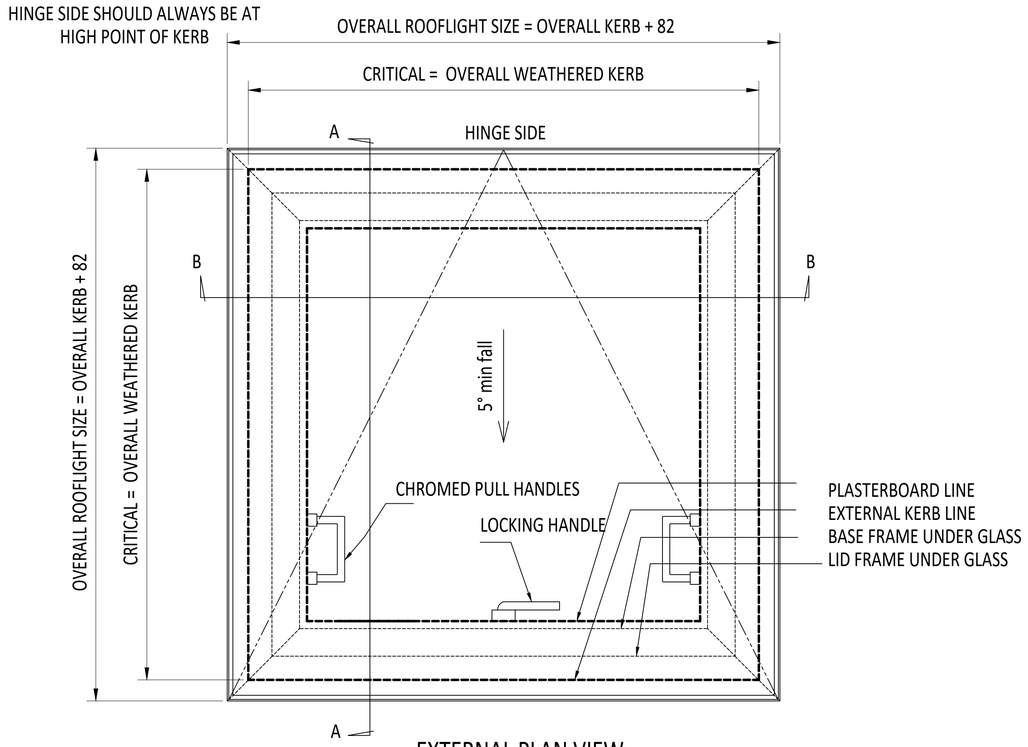

EXTERNAL PLAN VIEW
TRUE VIEW ON SLOPE

KERB DETAILS SHOWN INDICATIVE ONLY. DETAILED DESIGN BY OTHERS

CDM :HAZARD IDENTIFICATION - HANDLING MATERIALS

BE AWARE OF SHARP EDGES AND CORNERS WHEN HANDLING MATERIALS. MOST EDGES AND CORNERS WILL BE DEBURRDED BUT THERE IS STILL A SMALL RISK. WEAR APPROPRIATE PPE REQUIRED FOR THE TASK.
THE MHOR 1992 SET OUT A CLEAR RANKING OF MEASURES FOR DEALING WITH RISKS FROM MANUAL HANDLING, THESE ARE:

- **FIRST** : AVOID HAZARDOUS MANUAL HANDLING OPERATIONS SO FAR AS IS REASONABLY PRACTICABLE;
- **SECOND** : ASSESS ANY HAZARDOUS MANUAL HANDLING OPERATIONS THAT CANNOT BE AVOIDED; AND
- **THIRD** : REDUCE THE RISK OF INJURY SO FAR AS IS REASONABLY PRACTICABLE.

HAND PROTECTION (MANDATORY) TO: BS EN 388:1994.
ROOFLIGHTS MUST ONLY BE INSTALLED BY COMPETENT CONTRACTORS.
DANGER OF DAMAGING GLASS IF IT IS WALKED UPON. GLASS IS CLASSED AS NON-FRAGILE BUT SHOULD NOT BE WALKED ON. USE SPREADER BOARDS.
REFER TO RISK ASSESSMENT FOR FURTHER DETAILS.
FALL FROM HEIGHTS DURING INSTALLATION.

RENDER OF ROOFLIGHT - NOTE MAIN HANDLE HAS BEEN OMITTED FROM CURRENT DESIGNS, SIDE HANDLES NOW USED AS PER DRAWING

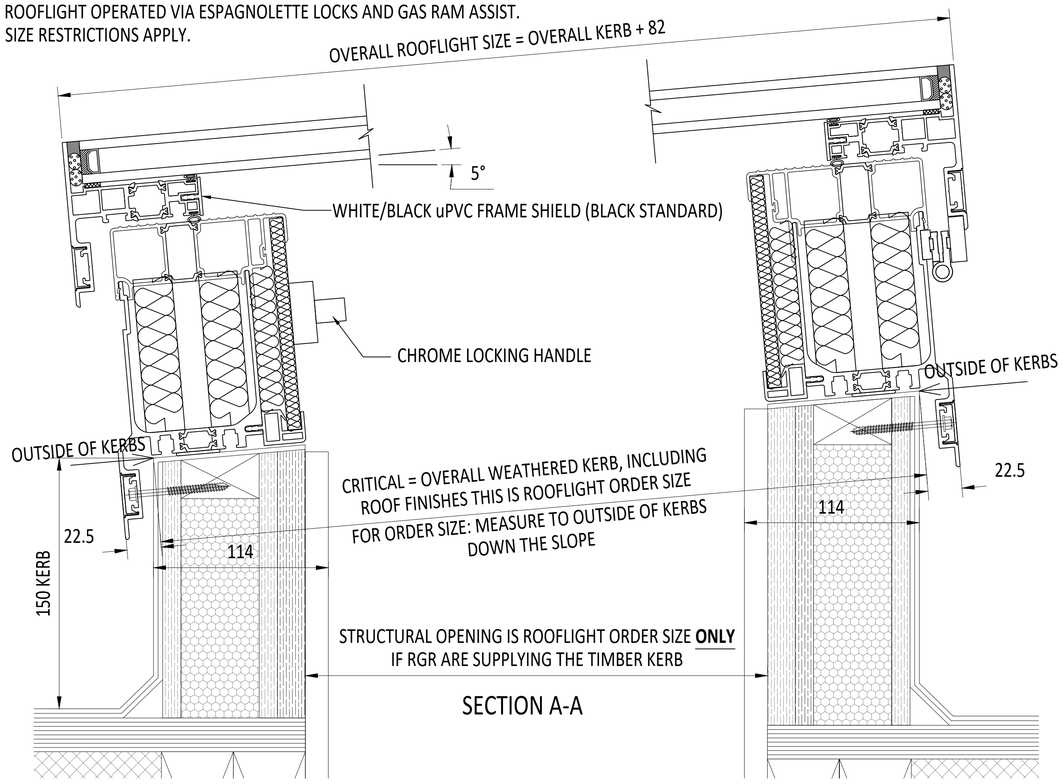

SECTION A-A

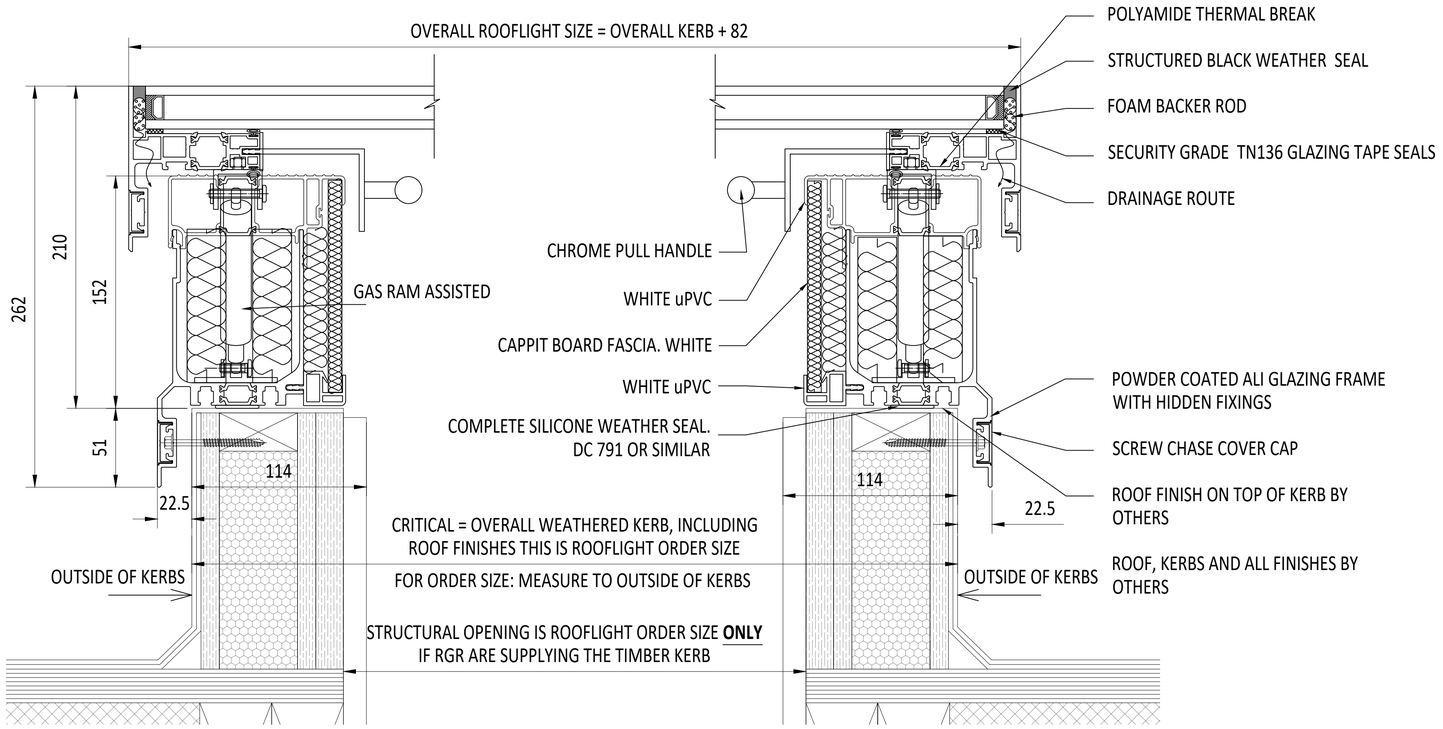

IF IN DOUBT ASK DO NOT SCALE

SKYWAY™

IT IS THE RESPONSIBILITY OF THE KERB DESIGNER TO ENSURE THE KERB WILL BE STRUCTURALLY ADEQUATE TO HOLD THE ROOFLIGHT. KERBS SHOWN ON THESE DRAWINGS ARE FOR ILLUSTRATION PURPOSES ONLY.

The manufacturer would advise an installation with a minimum pitch of 5° for rooflight units to minimize water pooling. Whilst the product can be installed flat without detriment to the warrantee, the manufacturer cannot be held responsible for any excessive pooling of water to the surface of the rooflight, post installation, if installed without an adequate fall. larger units may require a greater fall. The final decision on amount of fall required must be made by the client and relayed to the installer.

THIS DRAWING MUST NOT BE COPIED OR PASSED TO A THIRD PARTY WITHOUT WRITTEN CONSENT FROM THE MANUFACTURER.

CHECKED	R. P.	TOLERANCE UNLESS OTHERWISE STATED	±5	MATERIAL	ALUMINIUM + GLASS
DATE	06-06-2023	DIMENSIONS IN	MM	FINISH	MARINE GRADE POLYESTER POWDER COAT OPTIONS: RAL 7016 ANTHRACITE GREY, RAL 9005 BLACK, , 30% GLOSS
DRAWN	D. P.	SCALE	1:2, 1:6 @ A1		
DATE	06-06-2023				

REV	AMENDMENTS	SIGNED	CHECKED	DATE

Roofglaze Rooflights Ltd,
11 Howard Road, Eaton Socon,
St Neots, Cambs, PE19 8ET
Telephone 01480 474797

DRAWING N°. RGR-HV-23-302

REV

TITLE: SKYWAY MANUAL ACCESS FLATGLASS KERBS BY OTHERS

SIZE A 1

ROOFGLAZE Lighting by nature™